arXiv:1709.04101v1 [quant-ph] 13 Sep 2017

Pole Placement Approach to Coherent Passive Reservoir Engineering for Storing Quantum Information*

T. Nguyen† Z. Miao‡ Y. Pan§ N. H. Amini¶ V. Ugrinovskii‖
M. R. James†

September 14, 2017

Abstract

Reservoir engineering is the term used in quantum control and information technologies to describe manipulating the environment within which an open quantum system operates. Reservoir engineering is essential in applications where storing quantum information is required. From the control theory perspective, a quantum system is capable of storing quantum information if it possesses a so-called decoherence free subsystem (DFS). This paper explores pole placement techniques to facilitate synthesis of decoherence free subsystems via coherent quantum feedback control. We discuss limitations of the conventional 'open loop' approach and propose a constructive feedback design methodology for decoherence free subsystem engineering. It captures a quite general dynamic coherent feedback structure which allows systems with decoherence free modes to be synthesized from components which do not have such modes.

Keywords: Open quantum system; Decoherence free subsystem; Reservoir engineering; Coherent feedback control; Quantum control

1 Introduction

The environment within which the quantum system operates typically has a continuous degrading effect on the evolution of quantum particles. This effect known as *decoherence* is the reason for the continuous process of degeneration of distinctly quantum states into classical ones [13]. On the other hand, when a quantum system possesses a subsystem isolated from the detrimental influence of the environment and probing fields, the quantum information associated with dynamics of such a system is preserved and can be used for quantum computation when needed. In a sense, decoherence free subsystems (DFS) can play roles of memory elements in quantum information processing. This has motivated significant interest in the synthesis of quantum systems with a desired DFS structure.

The problem of DFS synthesis has been found to be nontrivial — it has been shown in [17] that conventional measurement feedback is ineffective in producing quantum systems having a DFS, however certain coherent controllers can overcome this limitation of the measurement-based feedback controllers. The objective of this paper is to put this observation on a solid systematic footing, by developing a quite general

*This research is supported by grants CE110001027 from Australian Research Council Centre of Excellence for Quantum Computation and Communication Technology, FA2386-12-1-4084 from AFOSR, and DP140101779 from Australian Research Council respectively. N.H.A. acknowledges CNRS funding under the JCJC INS2I 2016 "QIGR3CF" and JCNC INS2I 2017 "QFCCQI" projects.

†ARC Centre for Quantum Computation and Communication Technology, Research School of Engineering, The Australian National University, Canberra, ACT 2601, Australia.

‡QUANTIC lab, INRIA Paris, 2 rue Simone Iff, 75012 Paris, France

§Institute of Cyber-Systems and Control, Zhejiang University, Hangzhou 310027, China

¶CNRS, Laboratoire des signaux et systèmes (L2S), CentraleSupélec, 3 rue Joliot Curie, 91192 Gif-Sur-Yvette, France

‖Corresponding author, School of Information Technology and Electrical Engineering, University of New South Wales at the Australian Defence Force Academy, Canberra, ACT 2600, Australia

constructive coherent synthesis procedure for generating quantum systems with a DFS of desired dimension.

Our particular interest is in a class of quantum linear systems whose dynamics in the Heisenberg picture are described by complex quantum stochastic differential equations expressed in terms of annihilation operators only. Such systems are known to be passive [5]. Passivity ensures that the system does not generate energy. In addition, in such systems the notion of system controllability by noise and that of observability from the output field are known to be equivalent [4]. Also, one can readily identify uncontrollable and unobservable subspaces of the passive system by analyzing the system in the Heisenberg picture [17]. These additional features of annihilation only passive systems facilitate the task of synthesizing decoherence free subsystems by means of coherent feedback.

The focus on a general coherent feedback synthesis is the main distinct feature of this paper which differentiates it from other works of a similar kind, notably from [9,17]. The paper [17] presents an analysis of quantum systems equipped with coherent feedback for the purpose of characterizing decoherence free subsystems, quantum nondemolished (QND) variables and measurements capable of evading backaction; in [17] all these characteristics are expressed in geometric terms of (un)controllable and (un)observable subspaces. In contrast, in this paper we propose constructive algebraic conditions for the synthesis of coherent feedback to equip the system with a DFS. These conditions are expressed in terms of linear matrix inequalities (LMIs) and reduce the DFS synthesis problem to an algebraic pole assignment problem. After completing this work we became aware that Nurdin and Gough had also arrived at the pole placement idea [9]. However, our results are different in that they are not restricted to interconnected optical cavities considered in [9], and applicable to a coherent feedback interconnection of two general quantum systems of which interconnected optical cavities are a special case; see Section 4. Of course, the generality of our formulation means that the DFS engineering problem in this paper cannot be solved by calculating system poles directly, hence a more general approach is developed in this paper.

Also, the DFS synthesis methodology proposed here extends substantially our preliminary work [12]. The controller configuration in that paper was limited to resembling a classical Luenberger observer. It turns out that such a configuration is somewhat restrictive; for example, it is not sufficiently flexible to capture the controller structure analyzed in [17]. In this paper, we build our technique using the most general type of dynamic linear passive coherent feedback. We show that the controller structures from [12, 17] are in fact special cases of our general setting. In addition, we discuss the conventional open-loop approach to reservoir engineering and show the shortcoming of such approach. A shortened version of this paper has been scheduled for presentation at the 2017 American Control Conference [8]. Compared to the conference version, the present version is substantially revised and extended. In particular, it includes background material on quantum passive systems and complete proofs of results. Also, a new example is included to illustrate the possibility of creating a DFS shared by the principal plant and the controller, which appears to be not possible to achieve in simple optical cavity systems.

Notation. Given an underlying Hilbert space $\mathfrak{H}$ and an operator $x\colon \mathfrak{H} \to \mathfrak{H}$, x^* denotes the operator adjoint to x. In the case of a vector of operators, the vector consisting of the adjoint components of x is denoted $x^\#$, and $x^\dagger = (x^\#)^T$, where ^{T} denotes the transpose of a vector. Likewise, for a matrix A, $A^\#$ is the matrix whose entries are complex conjugate of the corresponding entries of A, and $A^\dagger = (A^\#)^T$. $[x, y] = xy - yx$ is the commutator of two operators, and in the case where x, y are vectors of operators, $[x, y^\dagger] = xy^\dagger - (y^\# x^T)^T$.

2 Background

2.1 Open Quantum Systems

Open quantum systems are systems that are coupled to an external environment or reservoir [1]. The environment exerts an influence on the system, in the form of vectors $W(t)$, $W^\dagger(t)$ consisting of quantum Wiener processes defined on a Hilbert space $\mathfrak{F}$ known as the Fock space. The unitary motion of the passive

annihilation only system governed by these processes is described by the stochastic differential equation

$$\begin{aligned} dU(t) &= \Big((-iH - \frac{1}{2}L^\dagger L)dt + dW^\dagger L - L^\dagger dW\Big)U(t), \\ U(0) &= I, \end{aligned} \tag{1}$$

where H and L are, respectively, the system Hamiltonian and the coupling operator through which the system couples to the environment. Then, any operator $X\colon \mathfrak{H} \to \mathfrak{H}$ generates the evolution $X(t) = j_t(X) = U(t)^*(X \otimes I)U(t)$ in the space of operators on the tensor product Hilbert space $\mathfrak{H} \otimes \mathfrak{F}$,

$$dX = \mathcal{G}(X)dt + dW^\dagger[X, L] + [L^\dagger, X]dW, \tag{2}$$

where

$$\begin{aligned} \mathcal{G}(X) &= -i[X, H] + \mathscr{L}_L(X), \\ \mathscr{L}_L(X) &= \frac{1}{2}L^\dagger[X, L] + \frac{1}{2}[L^\dagger, X]L \end{aligned}$$

are the generator and the Lindblad superoperator of the system, respectively [16]. The field resulting from the interaction between the system and the environment constitutes the output field of the system

$$dY = Ldt + dW. \tag{3}$$

2.2 Linear annihilation only systems

Linear annihilation only systems arise as a particular class of open quantum systems whose operators a_k, $k = 1, \ldots, n$, describe various modes of photon annihilation resulting from interactions between the environment and the system. Such operators satisfy the canonical commutation relations $[a_j, a_k^*] = \delta_{jk}$, where δ_{jk} is the Kronecker delta. Taking the system Hamiltonian and the coupling operator of the system to be, respectively, quadratic and linear functions of the vector $X = a = [a_1, \ldots a_n]^T$,

$$H = a^\dagger M a, \quad L = Ca, \tag{4}$$

where M is a Hermitian $n \times n$ matrix, and $C \in \mathbb{C}^{m\times n}$, the dynamics and output equations become

$$\begin{aligned} da &= Aadt + BdW \\ dy &= Cadt + dW, \end{aligned} \tag{5}$$

where the complex matrices $A \in \mathbb{C}^{n\times n}$, $B \in \mathbb{C}^{n\times m}$, and $C \in \mathbb{C}^{m\times n}$ satisfy

$$A = -iM - \frac{1}{2}C^\dagger C, \;\; B = -C^\dagger. \tag{6}$$

The following fundamental identity then holds [7]

$$A + A^\dagger + C^\dagger C = 0. \tag{7}$$

2.3 Passive annihilation only quantum systems

According to [5], passivity of a quantum system $\mathbf{P}$ is defined as a property of the system with respect to an output generated by an exosystem $\mathbf{W}$ and applied to input channels of the given quantum system on one hand, and a performance operator Z of the system on the other hand. To particularize the definition of [5] in relation to the specific class of annihilation only systems, we consider a class of exosystems, i.e., open quantum systems with zero Hamiltonian, an identity scattering matrix and a coupling operator u which couples the exosystem with its input field. The exosystem is assumed to be independent of $\mathbf{P}$ in the sense that u commutes with any operator from the C^* operator algebra generated by X and $X^\dagger$. The

time evolution of u is however determined by the full interacting system $\mathbf{P} \triangleleft \mathbf{W}$, and therefore may be influenced by $X, X^\dagger$.

If the output of the exosystem $\mathbf{W}$ is fed into the input of the system $\mathbf{P}$ in a cascade or series connection, the resulting system $\mathbf{P} \triangleleft \mathbf{W}$ has the Hamiltonian $H_{\mathbf{P}\triangleleft\mathbf{W}} = H + \mathrm{Im}(u^\dagger L)$, the identity scattering matrix and the field coupling operator $L_{\mathbf{P}\triangleleft\mathbf{W}} = L + u$ [5]. The resulting system ($\mathbf{P} \triangleleft \mathbf{W}$) then has the generator $\mathcal{G}_{\mathbf{P}\triangleleft\mathbf{W}}$.

Definition 1 ([5]) A system $\mathbf{P}$ with a performance output Z is passive if there exists a nonnegative observable V (called the *storage observable* of P) such that

$$\mathcal{G}_{\mathbf{P}\triangleleft\mathbf{W}}(V) \leq Z^\dagger u + u^\dagger Z + \lambda \tag{8}$$

for some constant $\lambda > 0$. The operator

$$r(\mathbf{W}) = Z^\dagger u + u^\dagger Z$$

is the *supply rate* which ensures passivity.

Now suppose $\mathbf{P}$ is a linear annihilation only system (4). Also, consider a performance output for the system $\mathbf{P} \triangleleft \mathbf{W}$ to be

$$Z = C_0 a + D_0 u,$$

with $C_0 \in \mathbb{C}^{l\times n}$, $D_0 \in \mathbb{C}^{l\times m}$. Taking $X = a$ in (2), the system $\mathbf{P} \triangleleft \mathbf{W}$ can be written as

$$\begin{aligned} da &= (Aa + Bu)dt + BdW, \\ dY &= (Ca + u)dt + dW, \\ Z &= C_0 a + D_0 u. \end{aligned} \tag{9}$$

where the complex matrices $A \in \mathbb{C}^{n\times n}$, $B \in \mathbb{C}^{n\times m}$, and $C \in \mathbb{C}^{m\times n}$ are the coefficients of the annihilation only system $\mathbf{P}$.

We further take the storage observable V having the form $V = a^\dagger P a$, and the supply rate having the form $r(\mathbf{W}) = Z^\dagger u + u^\dagger Z$. Then it can be shown that the system $\mathbf{P}$ is passive with a storage function V and a supply rate $r(\mathbf{W})$ if for some constant $\lambda > 0$,

$$\begin{aligned} &a^\dagger(PA + A^\dagger P)a + u^\dagger BPa + a^\dagger PBu \\ &\quad \leq (C_0 a + D_0 u)^\dagger u + u^\dagger(C_0 a + D_0 u) + \lambda. \end{aligned}$$

This condition is equivalent to the positive realness condition stated in Theorem 3 of [18] (letting $Q = 0$ in that theorem):

$$\begin{bmatrix} PA + A^\dagger P & PB - C_0^\dagger \\ B^\dagger P - C_0 & -(D_0 + D_0^\dagger) \end{bmatrix} \leq 0. \tag{10}$$

In the special case, where $V = a^\dagger a$, $D_0 = 0$ [18] and $C_0 = -C$, this reduces to the following inequality

$$A + A^\dagger \leq 0$$

as the condition for passivity. Clearly this condition is satisfied in the case of an annihilation only system $\mathbf{P}$ in the light of the identity (7). Hence the annihilation only system (9) is passive with respect to performance output $Z = -Ca$, with the storage function $V = a^\dagger a$.

2.4 Decoherence free subsystems

As mentioned, a decoherence free subsystem represents a subsystem whose variables are not affected by input fields and do not appear in the system output fields; this makes the DFS isolated from the environment and inaccessible to measurement devices, thus preserving the quantum information carried by the variables of the DFS. In relation to the annihilation only system (5), with $a = [a_1, \ldots, a_n]^T$, a component a_j is a decoherence-free mode if the evolution of a_j is independent of the input W and if the system output Y is

independent of a_j. The collection of decoherence-free modes forms a subspace, called the *decoherence-free subspace*.

An important fact about the existence of a decoherence-free subsystem for linear annihilation only systems follows from the results established in [4]:

Proposition 1 The linear annihilation only system (5) has a decoherence-free subsystem if and only if the matrix A has some of its poles on the imaginary axis, with the remaining poles residing in the open left half-plane of the complex plane.

Proof: According to [4, Lemma 2], for the system (5), the properties of controllability, observability and Hurwitz stability are equivalent. The statement of the proposition then follows by contraposition, after noting that being passive, the system (5) cannot have eigenvalues in the open right hand-side of the complex plane due to (7). □

According to Proposition 1, if the system (5) has a DFS, then there must exist a coordinate transformation of the system (5) such that in the new coordinates, the system takes the form, known as the Kalman decomposition:

$$\begin{aligned} d\tilde{a} &= \begin{bmatrix} \tilde{A}_{11} & \tilde{A}_{12} \\ 0 & \tilde{A}_{22} \end{bmatrix} \tilde{a}dt + \begin{bmatrix} \tilde{B}_1 \\ 0 \end{bmatrix} dW \\ dy &= \begin{bmatrix} \tilde{C}_1 & 0 \end{bmatrix} \tilde{a}dt + dW, \end{aligned}$$

By partitioning the vector $\tilde{a}$ accordingly, $\tilde{a} = [\tilde{a}_1 \ \tilde{a}_2]$, we observe that the decoherence induced by the environment and probing fields will not affect dynamics of the operator $\tilde{a}_2$. Furthermore, by expressing the system Hamiltonian H in the new coordinates as $H = \tilde{a}^\dagger \tilde{M} \tilde{a}$, we observe from the corresponding equation (6) that

$$\tilde{A}_{22} = -i\tilde{M}_{22},$$

where $\tilde{M}_{22}$ is the corresponding block of the matching partition of the matrix $\tilde{M}$. Since $\tilde{M}_{22}$ is Hermitian and has only real eigenvalues, this implies that the matrix $\tilde{A}_{22}$ can only have imaginary eigenvalues. This observation suggests that engineering a quantum system to have a decoherence free amounts to placing some of the poles of the corresponding system (5) on the imaginary axis.

3 Coherent reservoir engineering

Reservoir engineering refers to the process of determining and implementing coupling operators $L = [L_1; ...; L_n]$ for an open quantum system such that desired behaviors are achieved. Examples of common objectives include quantum computation by dissipation [15], entanglement [6], state preparation [14], and protection of quantum information [3, 11]. Typically open systems have some unavoidable couplings to the environment, and such channels may lead to loss of energy and quantum coherences. However, in many systems couplings can be engineered at the fabrication stage, providing a resource for tuning the behavior of the system.

In this section, the main results of the paper are presented. With reference to Fig. 1, we investigate conditions to enable the synthesis of a quantum coherent controller-system network to generate a DFS in the interconnected system through interactions between the principal quantum system and the controller.

The quantum linear passive system in Fig. 1 is the system of the form (5), and its input fields are further partitioned as $W = [w^T, u^T, f^T]^T$. Here, w represents a 'natural' environment for the system, and f and u represent an open-loop and feedback engineered fields, respectively. According to this partitioning, the system evolution is described as

$$da_p = A_p a_p dt + B_1 dw + B_2 du + B_3 df, \tag{11a}$$

$$dy = C_p a_p dt + dw. \tag{11b}$$

Accordingly, the matrices of the system have dimensions as follows: $A_p \in \mathbb{C}^{n\times n}$, $B_1 \in \mathbb{C}^{n\times n_w}$, $B_2 \in \mathbb{C}^{n\times n_u}$ $B_3 \in \mathbb{C}^{n\times n_f}$, and $C_p \in \mathbb{C}^{n_w\times n}$ $(n, n_w, n_u, n_f \in \mathbb{N})$. We also use the notation a_p for the vector $a_p(t) = [a_{p_1}(t), \ldots a_{p_n}(t)]^T$ of the system annihilation operators defined on its underlying Hilbert space $\mathfrak{H}_p$.

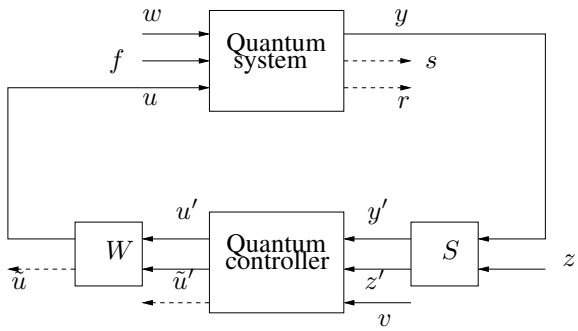

Figure 1: Coherent feedback network for DFS generation.

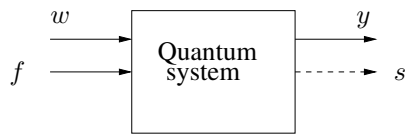

Figure 2: Open loop setup for DFS generation.

In terms of the Hamiltonian and coupling operators, the system has the Hamiltonian

$$H_p = a_p^\dagger M a_p \tag{12}$$

where M is an $n \times n$ complex Hermitian matrix, and is linearly coupled to the input fields via the coupling operators

$$L_{p_1} = \alpha_1 a_p, \quad L_{p_2} = \alpha_2 a_p, \quad L_{p_3} = \alpha_3 a_p \tag{13}$$

where $\alpha_1 \in \mathbb{C}^{n_w \times n}$, $\alpha_2 \in \mathbb{C}^{n_u \times n}$, $\alpha_3 \in \mathbb{C}^{n_f \times n}$ are complex matrices. Then the relations (6) specialize as follows:

$$\begin{aligned}
A_p &= -\left(iM + \frac{1}{2}\alpha_1^\dagger\alpha_1 + \frac{1}{2}\alpha_2^\dagger\alpha_2 + \frac{1}{2}\alpha_3^\dagger\alpha_3\right), \\
B_1 &= -\alpha_1^\dagger, \\
B_2 &= -\alpha_2^\dagger, \\
B_3 &= -\alpha_3^\dagger, \\
C_p &= \alpha_1.
\end{aligned}$$

The starting point of the discussion that follows is the assumption that under the influence of its natural environment w alone, (i.e., in the absence of the engineered fields f and u), the system does not possess a DFS. Mathematically, this assumption corresponds to the assumption that (A_p, B_1) is controllable and (A_p, C_p) is observable, since these properties rule out the existence of a DFS in the plant (11) when $B_2 = 0$, $B_3 = 0$; see Proposition 1 and [4, 17].

3.1 Open loop reservoir engineering for DFS generation

In many cases, system couplings can be engineered at a fabrication stage to reduce unavoidable loss of energy due to decoherence [13, 15]. The process of tuning the system at the fabrication stage does not involve feedback, and we let $L_{p_2} = 0$, which corresponds to $\alpha_2 = 0$ and $B_2 = 0$ in (11); see Fig. 2.

Then the system (11) reduces to that of the form

$$da_p = A_p a_p dt + B_1 dw + B_3 df, \tag{14a}$$

$$dy = C_p a_p dt + dw \tag{14b}$$

Here, w and f symbolize the natural environment and the fabricated open-loop field, respectively. Accordingly, the coupling operator L_{p_1} corresponds to a fixed coupling with the natural environment, while the coupling L_{p_3} corresponds to the engineered coupling. The physical realizability requirement imposes the constraint that

$$A_p + A_p^\dagger + B_1 B_1^\dagger + B_3 B_3^\dagger = 0, \tag{15}$$

cf. (7). Recall [7] that a quantum stochastic differential equation of the form (14) is said to be (canonically) physically realizable if it preserves the canonical commutation relations, $[a_p, a_p^\dagger] = a_p a_p^\dagger - (a_p^* a_p^T)^T = I$, and is a representation of an open harmonic oscillator, i.e., it possesses a Hamiltonian and a coupling operator. The satisfaction of the identity (15) is a necessary and sufficient condition for physical realizability [7, Theorem 5.1].

Theorem 1 Suppose $(-iM, B_1)$ is controllable. Then a DFS cannot be created by coupling the system to an engineered environment.

Proof: To prove the theorem we will show that the matrix A_p has all its eigenvalues in the open left half-plane of the complex plane, and therefore it cannot have a DFS, according to Proposition 1; see [4, Lemma 2].

First consider the system with a fixed coupling with the environment, i.e., $L_{p_3} = 0$. For this system, the physical realizability properties dictate that

$$A_{p1} + A_{p1}^\dagger + B_1 B_1^\dagger = 0, \tag{16}$$

with $A_{p1} = -iM - \frac{1}{2} B_1 B_1^\dagger$; see (6).

Recall that for an arbitrary $n \times n$ matrix Φ and an $n \times m$ matrix B, the pair (Φ, B) is controllable if and only if $(\Phi + \frac{1}{2} B B^\dagger, B)$ is controllable. Applying this fact to the pair $(-iM, B_1)$ which is controllable by the assumption of the theorem, we conclude that (A_{p1}, B_1) is controllable. Thus, equation (16) can be regarded as a Lyapunov equation

$$A_{p1} P + P A_{p1}^\dagger + B_1 B_1^\dagger = 0$$

with controllable (A_{p1}, B_1), which has a positive definite solution $P = I$. Since $B_1 B_1^\dagger \geq 0$, according to the inertia theorem [2, Theorem 3], the above observation about the existence of a positive definite solution to the Lyapunov equation implies that A_{p1} must have all its eigenvalues in the open left half-plane of the complex plane. As a result, if $(-iM, B_1)$ is controllable, the corresponding passive quantum system with fixed coupling cannot have a DFS, according to Proposition 1.

Next consider this system when it is coupled to an engineered environment, i.e., $L_{p_3} \neq 0$ and $B_3 \neq 0$. Since A_{p1} has been shown to have all eigenvalues in the open left half-plane of the complex plane, there exists a positive definite Hermitian matrix $P = P^\dagger > 0$ such that

$$A_{p1}^\dagger P + P A_{p1} < 0.$$

On the other hand, according to Corollary 4 of [10], the matrix $\frac{1}{2} B_3 B_3^\dagger P$ cannot have eigenvalues in the open left half-plane of the complex plane, and therefore $-\frac{1}{2} B_3 B_3^\dagger P - \frac{1}{2} P B_3 B_3^\dagger \leq 0$. This implies that

$$(A_{p1} - \frac{1}{2} B_3 B_3^\dagger)^\dagger P + P(A_{p1} - \frac{1}{2} B_3 B_3^\dagger) < 0$$

and therefore $A_p = A_{p1} - \frac{1}{2} B_3 B_3^\dagger$ must have all its eigenvalues in the open left half-plane of the complex plane. According to Proposition 1, this rules out the possibility for the system with engineered coupling to have a DFS.

□

Next, suppose that $(-iM, [B_1\ B_3])$ is not controllable[1], therefore $(-iM, B_1)$ is not controllable either. Theorem 1 does not rule out a possibility for a DFS to exist in this case. It is easy to show that

$$\ker(\mathcal{C}^T) = \ker(\mathcal{C}_w^T) \cap \ker(\mathcal{C}_f^T),$$

[1]Here, $[B_1\ B_3]$ is the matrix obtained by concatenating the rows of B_1 and B_3.

where $\mathcal{C}_w$, $\mathcal{C}_f$ are the controllability matrices with respect to the inputs w and f, respectively. From this observation, it follows that the dimension of the DFS of system (14) is less or equal to the dimension of each of the decoherence free subsystems arising when the quantum plant is coupled with the fixed and engineered fields only. This leads to the conclusion that coupling the system with additional engineered fields can only reduce the dimension of the DFS. In the remainder of the paper, we will show that using coherent feedback, on the other hand, does allow to create or increase dimension of a DFS.

3.2 Coherent feedback reservoir engineering

In this section we consider a system of the form (11). To simplify the notation we will combine two static channels w and f into a single channel, which will again be denoted as w. More precisely, we combine the coupling operators L_{p_1} and L_{p_3} into a single operator L_{p_1}. Then the system (11) reduces to a system of the form

$$da_p = A_p a_p dt + B_1 dw + B_2 du, \tag{17a}$$
$$dy = C_p a_p dt + dw, \tag{17b}$$

where the new matrix B_1 is composed of the previous matrices B_1 and B_3, so that using the new notation we have

$$\begin{aligned} A_p &= -\left(iM + \frac{1}{2}\alpha_1^\dagger \alpha_1 + \frac{1}{2}\alpha_2^\dagger \alpha_2\right), \\ B_1 &= -\alpha_1^\dagger, \\ B_2 &= -\alpha_2^\dagger, \\ C_p &= \alpha_1. \end{aligned} \tag{18}$$

For a coherent quantum controller for the quantum plant (11), we will consider another open quantum linear annihilation only system. Such a system will be assumed to be coupled with three environment noise channels, y', z' and v. The fields y', z' are to produce output fields which will be used to form the feedback, and the channel v will be used to ensure that the constructed observer is physically realizable. As is known [7], once physical realizability of the observer is ensured, one can readily construct a scattering matrix, a Hamiltonian and a collection of coupling operators describing the quantum evolution of the controller in the form of a quantum stochastic differential equation (2). Alternatively, a physically realizable coherent controller can be represented in the form of the quantum stochastic differential equation (5) [7], i.e., in the form

$$da_c = A_c a_c dt + G_1 dy' + G_2 dz' + G_3 dv, \tag{19a}$$
$$du' = K a_c dt + dy', \tag{19b}$$
$$d\tilde{u}' = \tilde{K} a_c dt + dz', \tag{19c}$$

where for physical realizability, the following constraints must be satisfied [7, Theorem 5.1]:

$$A_c + A_c^\dagger + G_1 G_1^\dagger + G_2 G_2^\dagger + G_3 G_3^\dagger = 0, \tag{20}$$
$$K = -G_1^\dagger, \tag{21}$$
$$\tilde{K} = -G_2^\dagger. \tag{22}$$

Interconnection between the controller and the plant are through scattering equations relating the output fields of the plant with the input channels of the controller and *vice versa*. Specifically, the scattering equation

$$\begin{bmatrix} y' \\ z' \end{bmatrix} = S \begin{bmatrix} y \\ z \end{bmatrix}, \tag{23}$$

links the output field of the plant y and the controller environment z with the input controller channels y', z'. Here, S is a unitary matrix partitioned as

$$S = \begin{bmatrix} S_{11} & S_{12} \\ S_{21} & S_{22} \end{bmatrix}. \tag{24}$$

Likewise, feedback from the controller (19) is via a unitary matrix W,

$$\begin{bmatrix} u \\ \tilde{u} \end{bmatrix} = W \begin{bmatrix} u' \\ \tilde{u}' \end{bmatrix}, \quad W = \begin{bmatrix} W_{11} & W_{12} \\ W_{21} & W_{22} \end{bmatrix}. \tag{25}$$

The matrices A_c, $G_1 = -K^\dagger$, $G_2 = -\tilde{K}^\dagger$, G_3, and the scattering matrices S, W are regarded as the controller design parameters. Our objective in this paper is to find a procedure for selecting those parameters so that the resulting coherently interconnected quantum system in Fig. 1 possesses a decoherence free subsystem.

To devise the DFS synthesis procedure, we first note that the control system governed by y, z, v and output u can be represented as

$$\begin{aligned} da_c &= (A_c a_c - (G_1 S_{11} + G_2 S_{21}) B_1^\dagger a_p) dt \\ &\quad + (G_1 S_{11} + G_2 S_{21}) dw \\ &\quad + (G_1 S_{12} + G_2 S_{22}) dz + G_3 dv, \\ du &= (-(W_{11} G_1^\dagger + W_{12} G_2^\dagger) a_c \\ &\quad - (W_{11} S_{11} + W_{12} S_{21}) B_1^\dagger a_p) dt \\ &\quad + (W_{11} S_{11} + W_{12} S_{21}) dw \\ &\quad + (W_{11} S_{12} + W_{12} S_{22}) dz \end{aligned} \tag{26}$$

Also, the closed loop system is described by the quantum stochastic differential equation

$$d \begin{bmatrix} a_p \\ a_c \end{bmatrix} = A_{cl} \begin{bmatrix} a_p \\ a_c \end{bmatrix} dt + B_{cl} \begin{bmatrix} dw \\ dz \\ dv \end{bmatrix}, \tag{27}$$

with block matrices A_{cl}, B_{cl} partitioned as shown in (28):

$$\begin{aligned} A_{cl} &= \left[\begin{array}{c|c} A_p - B_2(W_{11} S_{11} + W_{12} S_{21}) B_1^\dagger & -B_2(W_{11} G_1^\dagger + W_{12} G_2^\dagger) \\ \hline -(G_1 S_{11} + G_2 S_{21}) B_1^\dagger & A_c \end{array} \right], \\ B_{cl} &= \left[\begin{array}{c|c|c} B_1 + B_2(W_{11} S_{11} + W_{12} S_{21}) & B_2(W_{11} S_{12} + W_{12} S_{22}) & 0 \\ \hline G_1 S_{11} + G_2 S_{21} & G_1 S_{12} + G_2 S_{22} & G_3 \end{array} \right]. \end{aligned} \tag{28}$$

Lemma 1 Let

$$\begin{aligned} A_c = A_p &- B_2(W_{11} S_{11} + W_{12} S_{21}) B_1^\dagger \\ &+ (G_1 S_{11} + G_2 S_{21}) B_1^\dagger \\ &- B_2(W_{11} G_1^\dagger + W_{12} G_2^\dagger) \end{aligned} \tag{29}$$

Then for A_{cl} to have all eigenvalues on the imaginary axis or in the left half-plane of the complex plane it is necessary and sufficient that the following matrices

$$\begin{aligned} \hat{A} &= A_p - B_2(W_{11} S_{11} + W_{12} S_{21}) B_1^\dagger \\ &\quad - B_2(W_{11} G_1^\dagger + W_{12} G_2^\dagger), \end{aligned} \tag{30}$$

$$\begin{aligned} \check{A} &= A_p - B_2(W_{11} S_{11} + W_{12} S_{21}) B_1^\dagger \\ &\quad + (G_1 S_{11} + G_2 S_{21}) B_1^\dagger \end{aligned} \tag{31}$$

have all eigenvalues on the imaginary axis or in the left half-plane of the complex plane.

Proof: The matrix A_{cl} has the same eigenvalues as the matrix

$$\begin{bmatrix} I & 0 \\ I & -I \end{bmatrix} A_{cl} \begin{bmatrix} I & 0 \\ I & -I \end{bmatrix}$$
$$= \left[\begin{array}{c|c} \begin{array}{r} A_p - B_2W_{11}(S_{11}B_1^\dagger + G_1^\dagger) \\ -B_2W_{12}(S_{21}B_1^\dagger + G_2^\dagger) \end{array} & B_2(W_{11}G_1^\dagger + W_{12}G_2^\dagger) \\ \hline \begin{array}{r} A_p - A_c \\ -B_2(W_{11}S_{11} + W_{12}S_{21})B_1^\dagger \\ +(G_1S_{11} + G_2S_{21})B_1^\dagger \\ -B_2(W_{11}G_1^\dagger + W_{12}G_2^\dagger) \end{array} & B_2(W_{11}G_1^\dagger + W_{12}G_2^\dagger) + A_c \end{array}\right].$$

Hence the lemma follows, due to the definition of A_c in (29).

□

Theorem 2 Suppose matrices S, W are given. Let G_1, G_2 be such that

(a) The following linear matrix inequality (LMI) in G_1, G_2 is satisfied

$$\begin{bmatrix} R & G_1 & G_2 \\ G_1^\dagger & -I & 0 \\ G_2^\dagger & 0 & -I \end{bmatrix} \leq 0, \tag{32}$$

where

$$\begin{aligned} R = & -B_1B_1^\dagger - B_2B_2^\dagger - B_2(W_{11}S_{11} + W_{12}S_{21})B_1^\dagger \\ & -B_1(S_{21}^\dagger W_{12}^\dagger + S_{11}^\dagger W_{11}^\dagger)B_2^\dagger + (G_1S_{11} + G_2S_{21})B_1^\dagger \\ & +B_1(S_{11}^\dagger G_1^\dagger + S_{21}^\dagger G_2^\dagger) - B_2(W_{11}G_1^\dagger + W_{12}G_2^\dagger) \\ & -(G_1W_{11}^\dagger + G_2W_{12}^\dagger)B_2^\dagger; \end{aligned} \tag{33}$$

(b) The matrices $\hat{A}$ and $\check{A}$, defined in equations (30) and (31) respectively, have all their eigenvalues in the closed left half-plane, with at least one of them having eigenvalues on the imaginary axis.

Then a matrix G_3 can be found such that the closed loop system (27) admits a DFS.

Proof: Via the Schur complement, (32) is equivalent to

$$R + G_1G_1^\dagger + G_2G_2^\dagger \leq 0.$$

Therefore one can find G_3 such that

$$R + G_1G_1^\dagger + G_2G_2^\dagger + G_3G_3^\dagger = 0.$$

From this identity and the expression (29), the identity (20) follows. This shows that the feasibility of the LMI (32) ensures that the controller system (19) can be made physically realizable by appropriately choosing G_3. As a result, the closed loop system, being a feedback interconnection of physically realizable systems, is a physically realizable annihilation only system. Also, condition (b) and Lemma 1 ensure that A_{cl} has eigenvalues on the imaginary axis. Then it follows from Proposition 1 that the closed loop system (27) has a DFS.

□

Note that matrices $\hat{A}$ and $\check{A}$ can be rewritten as

$$\begin{aligned} \hat{A} = & A_p - B_2(W_{11}S_{11} + W_{12}S_{21})B_1^\dagger \\ & -B_2[W_{11}\ W_{12}] \begin{bmatrix} G_1^\dagger \\ G_2^\dagger \end{bmatrix}, \end{aligned} \tag{34}$$

$$\begin{aligned} \check{A} = & A_p - B_2(W_{11}S_{11} + W_{12}S_{21})B_1^\dagger \\ & +[G_1\ G_2] \begin{bmatrix} S_{11} \\ S_{21} \end{bmatrix} B_1^\dagger \end{aligned} \tag{35}$$

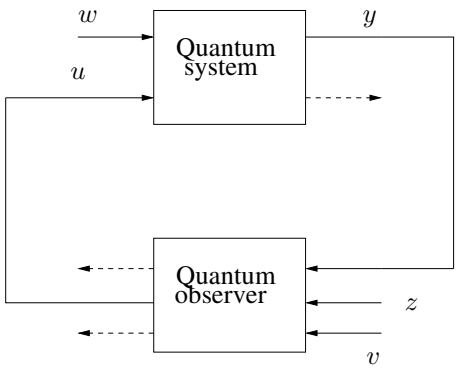

Figure 3: Coherent plant-observer network considered in [12].

A necessary condition to ensure that an eigenvalue assignment can be carried out for these matrices by selecting G_1, G_2, is that the pair $(A_p, B_2[W_{11}\ W_{12}])$ is controllable and the pair $(A_p, \begin{bmatrix} S_{11} \\ S_{21} \end{bmatrix} B_1^\dagger)$ is observable; the latter condition is equivalent to the controllability of the pair $(A_p^\dagger, B_1 \begin{bmatrix} S_{11}^\dagger & S_{21}^\dagger \end{bmatrix})$. Indeed, these controllability and observability conditions imply that $(A_p - B_2(W_{11}S_{11} + W_{12}S_{21})B_1^\dagger, \begin{bmatrix} S_{11} \\ S_{21} \end{bmatrix} B_1^\dagger)$ is observable and $(A_p - B_2(W_{11}S_{11} + W_{12}S_{21})B_1^\dagger, B_2[W_{11}\ W_{12}])$ is controllable. Therefore, if $(A_p, B_2[W_{11}\ W_{12}])$ and $(A_p^\dagger, B_1 \begin{bmatrix} S_{11}^\dagger & S_{21}^\dagger \end{bmatrix})$ are controllable, one can always select G_1 and G_2 so that the matrices $\hat{A}$, $\check{A}$ have a required eigenvalue distribution. Thus the conditions of Theorem 2 boil down to solving a simultaneous pole assignment problem under an LMI constraint.

We next demonstrate that our pole assignment problem captured quantum plant-controller DFS architectures considered in [12, 17].

3.3 Special case 1: DFS synthesis using a coherent observer [12]

In [12], the DFS synthesis was carried out using a quantum analog of the Luenberger observer for a class of linear annihilation only systems with a Hamiltonian and a coupling operator described in (12), (13); see Fig. 3. This controller structure is a special case of the architecture in Fig. 1, when the two channels w and f are combined as per (17), and

$$S = \begin{bmatrix} I & 0 \\ 0 & I \end{bmatrix}, \quad W = \begin{bmatrix} 0 & I \\ I & 0 \end{bmatrix}$$

With this choice of S and W, we have from (29)

$$A_c = A_p + G_1 B_1^\dagger - B_2 G_2^\dagger \tag{36}$$

Corollary 1 Suppose the pair (A_p, C_p) is observable and the pair (A_p, B_2) is controllable. Let G_1, G_2 be such that

(a) The following linear matrix inequality (LMI) is satisfied

$$\begin{bmatrix} R & G_1 & G_2 \\ G_1^\dagger & -I & 0 \\ G_2^\dagger & 0 & -I \end{bmatrix} \leq 0, \tag{37}$$

where

$$\begin{aligned} R = &-B_1 B_1^\dagger - B_2 B_2^\dagger \\ &+ G_1 B_1^\dagger + B_1 G_1^\dagger - B_2 G_2^\dagger - G_2 B_2^\dagger \end{aligned} \tag{38}$$

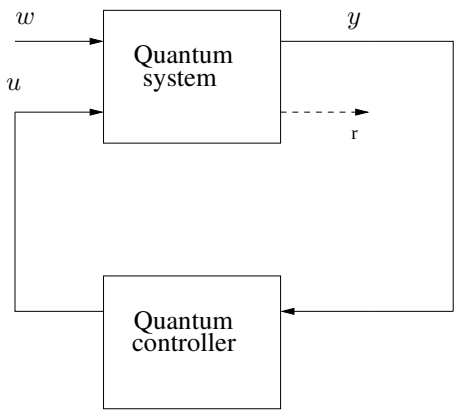

Figure 4: Special Case 2: Coherent feedback network for DFS generation considered in [17].

(b) The matrices

$$\hat{A} = A_p - B_2 G_2^\dagger, \tag{39}$$
$$\check{A} = A_p + G_1 B_1^\dagger \tag{40}$$

have all eigenvalues on the imaginary axis or in the left half-plane of the complex plane, with at least one of them having eigenvalues on the imaginary axis.

Then the closed loop system admits a DFS.

Proof: Via the Schur complement, condition (37) is equivalent to the condition

$$\begin{aligned} &-B_1 B_1^\dagger - B_2 B_2^\dagger + G_1 B_1^\dagger + B_1 G_1^\dagger \\ &-B_2 G_2^\dagger - G_2 B_2^\dagger + G_1 G_1^\dagger + G_2 G_2^\dagger \leq 0. \end{aligned}$$

This ensures that

$$A_c + A_c^\dagger + G_1 G_1^\dagger + G_2 G_2^\dagger \leq 0.$$

Therefore, one can find G_3 such that the controller is physically realizable. The claim then follows from Theorem 2.

□

3.4 Special Case 2: Coherent feedback DFS generation model from [17]

Consider a system of Fig. 1 in which $S = I$, $W = I$, and let $G_2 = 0$, $G_3 = 0$. This corresponds to the system shown in Fig. 4; which was considered in [17]. In this case, the controller matrix becomes

$$A_c = A_p - B_2 B_1^\dagger + G_1 B_1^\dagger - B_2 G_1^\dagger. \tag{41}$$

Corollary 2 Suppose the pair (A_p, C_p) is observable and the pair (A_p, B_2) is controllable. Let G_1 be such that

(a) The following equation is satisfied

$$\begin{aligned} &-(B_1 + B_2)(B_1 + B_2)^\dagger + G_1 (B_1 - B_2)^\dagger \\ &\qquad +(B_1 - B_2) G_1^\dagger + G_1 G_1^\dagger = 0; \end{aligned} \tag{42}$$

(b) The matrices

$$\hat{A} = A_p - B_2 B_1^\dagger - B_2 G_1^\dagger, \tag{43}$$
$$\check{A} = A_p - B_2 B_1^\dagger + G_1 B_1^\dagger \tag{44}$$

have all eigenvalues on the imaginary axis or in the left half-plane of the complex plane, with at least one of them having eigenvalues on the imaginary axis.

Then the closed loop system admits a DFS.

Proof: Condition (42) ensures that

$$A_c + A_c^\dagger + G_1 G_1^\dagger = 0.$$

Next, $\hat{A}$ and $\check{A}$ have eigenvalues on the imaginary axis or in the open left half-plane, hence the statement of the corollary follows from Theorem 2. □

4 Examples

4.1 Example 1

To illustrate the DFS synthesis procedure developed in the previous section, consider a system consisting of two optical cavities interconnected as shown in Fig. 3. The system is similar to those considered in [9].

The cavity to be controlled is described by equation (17), with all matrices becoming complex numbers

$$\begin{aligned} A_p &= -iM - \frac{\kappa_1 + \kappa_2}{2}, \quad B_1 = -\sqrt{\kappa_1}, \quad B_2 = -\sqrt{\kappa_2}, \\ C_p &= -B_1^* = \sqrt{\kappa_1}. \end{aligned} \tag{45}$$

Here, κ_1, κ_2 are real nonnegative numbers, characterizing the strength of the couplings between the cavity and the input fields w and u, respectively, and M characterizes the Hamiltonian of the cavity.

Clearly, the pair (A_p, C_p) is observable and the pair (A_p, B_2) is controllable, therefore the optical cavity cannot have a DFS unless the cavity is lossless. To synthesize a DFS, let us connect this cavity to another optical cavity with the same Hamiltonian, as shown in Fig. 3. This corresponds to letting the controller have the coefficients

$$\begin{aligned} A_c &= -iM - \frac{\kappa_3 + \kappa_4}{2}, \quad G_1 = -\sqrt{\kappa_3}, \quad G_2 = -\sqrt{\kappa_4}, \\ K &= \sqrt{\kappa_4}, \quad G_3 = 0. \end{aligned} \tag{46}$$

and letting the scattering matrices S and W be

$$S = \begin{bmatrix} 1 & 0 \\ 0 & 1 \end{bmatrix}, \quad W = \begin{bmatrix} 0 & 1 \\ 1 & 0 \end{bmatrix}. \tag{47}$$

We now apply Corollary 1 to show that the parameters κ_3, κ_4 for the controller cavity can be chosen so that the two-cavity system has a DFS. It is readily verified that the matrices $\hat{A}$ and $\check{A}$ in (39), (40) reduce to

$$\hat{A} = -iM - \frac{\kappa_1 + \kappa_2}{2} - \sqrt{\kappa_2 \kappa_4}, \tag{48}$$

$$\check{A} = -iM - \frac{\kappa_1 + \kappa_2}{2} + \sqrt{\kappa_1 \kappa_3}. \tag{49}$$

From Corollary 1, we need either $\hat{A}$ or $\check{A}$ to have poles on the imaginary axis in order to create a DFS within the closed-loop system. Clearly, for the two-cavity system under consideration this can only be achieved by placing the pole of $\check{A}$ at the origin. For this, the coupling rate κ_3 of the controller must be set to

$$\kappa_3 = \frac{(\kappa_1 + \kappa_2)^2}{4\kappa_1}. \tag{50}$$

Also we must satisfy the LMI condition (37). The matrix R in this example reduces to

$$R = -\kappa_1 - \kappa_2 + 2\sqrt{\kappa_1 \kappa_3} - 2\sqrt{\kappa_2 \kappa_4}. \tag{51}$$

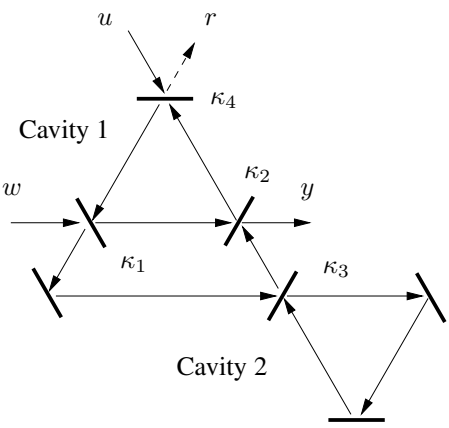

Figure 5: The two-cavity system for Example 2.

Hence, using (50) and (51), the LMI condition (37) reduces to the two following inequalities:

$$\text{Re}\left[-\kappa_1 - 2\kappa_1\sqrt{\kappa_2\kappa_4} \pm \sqrt{D}\right] \leq 0, \tag{52}$$

where

$$\begin{aligned} D = \kappa_1^2 + \kappa_1^3 + 2\kappa_1^2\kappa_2 + \kappa_1\kappa_2^2 + 4\kappa_1^2\kappa_4 \\ +4\kappa_1^2\kappa_2\kappa_4 - 4\kappa_1^2\sqrt{\kappa_2\kappa_4}. \end{aligned}$$

The inequality (52) is the only constraint for the remaining coupling parameter κ_4 to be determined. Notice that there is an obvious solution to this inequality in the case where $\kappa_1 = \kappa_2 = \kappa$. The solution is $\kappa_3 = \kappa_4 = \kappa$ which satisfies both (50) and (52).

The above calculations demonstrate that by placing the pole of the controller on the imaginary axis, one can effectively create a DF mode which did not exist in the original system. This fact has been established previously in [9] by calculating the system poles, whereas we have arrived at this conclusion from a more general Corollary 1, as a special case.

4.2 Example 2

We now present an example in which, the DFS is created which is shared between the controlled system and the controller. The controlled system in this example consists of two cavities as shown in Fig. 5.

Denote the matrices associated of the Hamiltonians corresponding to the each cavity internal dynamics as M_1, M_2. Also for the convenience of notation, define the complex numbers

$$\gamma_j = \sqrt{\kappa_j}, \quad j = 1, \ldots, 4,$$

associated with the coupling strengths within the cavities. All four constants are assumed to be nonzero.

Then the equations governing the dynamics of the two-cavity system have the form of (17) with

$$\begin{aligned} A_p &= \begin{bmatrix} -\left(iM_1 + \frac{|\gamma_1|^2+|\gamma_2|^2}{2} + \gamma_1^*\gamma_2\right) & -\gamma_2\gamma_3^* \\ -\gamma_1^*\gamma_3 & -\left(iM_2 + \frac{|\gamma_3|^2}{2}\right) \end{bmatrix}, \\ B_1 &= \begin{bmatrix} -(\gamma_1+\gamma_2) \\ -\gamma_3 \end{bmatrix}, \quad B_2 = \begin{bmatrix} -\gamma_4 \\ 0 \end{bmatrix}, \\ C_p &= -B_1^\dagger = \begin{bmatrix} \gamma_1+\gamma_2 & \gamma_3 \end{bmatrix}. \end{aligned} \tag{53}$$

To verify observability of the pair (A_p, C_p), we observe that

$$\det\begin{bmatrix} C_p \\ C_pA_p \end{bmatrix} = \frac{1}{2}\gamma_3^*\left(|\gamma_3|^2(\gamma_1^*-\gamma_2^*)\right.$$
$$+(\gamma_1^*+\gamma_2^*)(|\gamma_1|^2-|\gamma_2|^2)$$
$$\left.+2i(\gamma_1^*+\gamma_2^*)(M_1-M_2)\right).$$

Suppose $\gamma_1 = -\gamma_2$, then $\det\begin{bmatrix} C_p \\ C_pA_p \end{bmatrix} = \gamma_3^*\gamma_1^*|\gamma_3|^2$, and we conclude that the matrix $\begin{bmatrix} C_p \\ C_pA_p \end{bmatrix}$ is full rank. This implies that in the case $\gamma_1 = -\gamma_2$, the pair (A_p, C_p) is observable. Also, the pair (A_p, B_2) is controllable, since

$$\det\left[B_2\ A_pB_2\right] = -\gamma_4^2\gamma_3\gamma_1^* \neq 0.$$

These observations allow us to apply Corollary 1 to construct a DFS by interconnecting the two-cavity system with a coherent quantum observer, which we now construct.

For simplicity, choose

$$G_1 = \begin{bmatrix} g_1 \\ 0 \end{bmatrix}, \quad G_2 = \begin{bmatrix} 0 \\ g_2 \end{bmatrix}.$$

With this choice of G_1 and G_2 and under the condition $\gamma_1 = -\gamma_2$, the matrices $\hat{A} = A_p - B_2G_2^\dagger$ and $\check{A} = A_p + G_1B_1^\dagger$ take the form

$$\hat{A} = \begin{bmatrix} -iM_1 & -\gamma_2\gamma_3^* + \gamma_4 g_2^* \\ -\gamma_1^*\gamma_3 & -\left(iM_2 + \frac{|\gamma_3|^2}{2}\right) \end{bmatrix},$$
$$\check{A} = \begin{bmatrix} -iM_1 & -\gamma_2\gamma_3^* - g_1\gamma_3^* \\ -\gamma_1^*\gamma_3 & -\left(iM_2 + \frac{|\gamma_3|^2}{2}\right) \end{bmatrix}.$$

Letting $g_2 = \frac{\gamma_2^*\gamma_3}{\gamma_4^*}$, $g_1 = -\gamma_2$ allows us to conclude that each of the matrices $\hat{A}$ and $\check{A}$ have one imaginary eigenvalue and one eigenvalue with negative real part, $-\left(iM_2 + \frac{|\gamma_3|^2}{2}\right)$.

It remains to show that the LMI condition (37) is satisfied in this example. Noting that with the above choice of g_1, g_2,

$$R = \begin{bmatrix} -|\gamma_4|^2 & 2\gamma_2\gamma_3^* \\ 2\gamma_2^*\gamma_3 & -|\gamma_3|^2 \end{bmatrix},$$

$R < 0$ holds provided $|\gamma_4|^2 > 4|\gamma_2|^2$. Next, the LMI (37) in this example requires that

$$\begin{bmatrix} -|\gamma_4|^2 & 2\gamma_2\gamma_3^* & -\gamma_2 & 0 \\ 2\gamma_2^*\gamma_3 & -|\gamma_3|^2 & 0 & \frac{\gamma_2^*\gamma_3}{\gamma_4^*} \\ -\gamma_2^* & 0 & -1 & 0 \\ 0 & \frac{\gamma_2\gamma_3^*}{\gamma_4} & 0 & -1 \end{bmatrix} < 0 \tag{54}$$

Using the Schur complement, this requirement is equivalent to

$$\begin{bmatrix} -|\gamma_4|^2 & 2\gamma_2\gamma_3^* \\ 2\gamma_2^*\gamma_3 & -|\gamma_3|^2 \end{bmatrix} + \begin{bmatrix} |\gamma_2|^2 & 0 \\ 0 & \frac{|\gamma_2|^2|\gamma_3|^2}{|\gamma_4|^2} \end{bmatrix} < 0.$$

The latter condition holds when $|\gamma_4|^2 > (3+\sqrt{10})|\gamma_2|^2$.

5 Concluding remarks

In this paper, we have proposed a general coherent quantum controller synthesis procedure for generating decoherence free subspaces in quantum systems. Decoherence free components capable of storing quantum

information are regarded to be essential for quantum computation and communication, as quantum memory elements [9]. When the feedback loop is in the DFS configuration, the DFS mode is 'protected', which also means that to access dynamics of that mode, the system must be augmented with a mechanism to dynamically change the feedback configuration in order to bring the system in and out of the 'DF state'. E.g., from the above examples, we see that adjusting the values of coupling strengths is one possibility to achieve this. However, this approach is only applicable for experimental systems which have tunable coupling devices available, such as an optical waveguide or a microwave superconducting cavity. Another viable approach for the systems in those examples would be changing the loop configuration by using optical switches to either break the feedback loop or form an additional feedback connection, i.e., form a double-pass feedback loop; the latter is essentially the approach presented in [9]. Our future work will consider these approaches in greater detail, to obtain general dynamical reading and writing procedures augmenting our general results in a fashion similar to how this has been done in [9] for optical cavity systems.

References

[1] H.-P. Breuer and F. Petruccione. *The theory of open quantum systems*. Oxford University Press on Demand, 2002.

[2] C.-T. Chen. A generalization of the inertia theorem. *SIAM Journal on Applied Mathematics*, 25(2):158–161, 1973.

[3] J. Cohen and M. Mirrahimi. Dissipation-induced continuous quantum error correction for superconducting circuits. *Phys. Rev. A*, 90:062344, Dec 2014.

[4] J. E. Gough and G. Zhang. On realization theory of quantum linear systems. *Automatica*, 59:139–151, 2015.

[5] M. R. James and J. E. Gough. Quantum dissipative systems and feedback control design by interconnection. *IEEE Transactions on Automatic Control*, 55(8):1806–1821, 2010.

[6] H. Krauter, C. A. Muschik, K. Jensen, W. Wasilewski, J. M. Petersen, J. I. Cirac, and E. S. Polzik. Entanglement generated by dissipation and steady state entanglement of two macroscopic objects. *Phys. Rev. Lett.*, 107:080503, Aug 2011.

[7] A. I. Maalouf and I. R. Petersen. Bounded real properties for a class of annihilation-operator linear quantum systems. *IEEE Transactions on Automatic Control*, 56(4):786–801, 2011.

[8] T. Nguyen, Z. Miao, Y. Pan, N. H. Amini, V. Ugrinovskii, and M. R. James. Pole placement approach to coherent passive reservoir engineering for storing quantum information. In *American Control Conference*, 2017 (to appear).

[9] H. I Nurdin and J. E. Gough. Modular quantum memories using passive linear optics and coherent feedback. *Quantum Information & Computation*, 15(11-12):1017–1040, 2015.

[10] A. Ostrowski and H. Schneider. Some theorems on the inertia of general matrices. *Journal of Mathematical analysis and applications*, 4(1):72–84, 1962.

[11] Y. Pan and T. Nguyen. Stabilizing quantum states and automatic error correction by dissipation control. *IEEE Transactions on Automatic Control*, 2016.

[12] Y. Pan, T. Nguyen, Z. Miao, N. Amini, V. Ugrinovskii, and M. R. James. Coherent observer engineering for protecting quantum information. In *35th Chinese Control Conference (CCC), 2016*, pages 9139–9144. IEEE, 2016.

[13] J. F. Poyatos, J. I. Cirac, and P. Zoller. Quantum reservoir engineering with laser cooled trapped ions. *Physical review letters*, 77(23):4728, 1996.

[14] F. Ticozzi and L. Viola. Analysis and synthesis of attractive quantum markovian dynamics. *Automatica*, 45(9):2002–2009, 2009.

[15] F. Verstraete, M .M. Wolf, and J. I. Cirac. Quantum computation and quantum-state engineering driven by dissipation. *Nature physics*, 5(9):633–636, 2009.

[16] H. M. Wiseman and G. J. Milburn. *Quantum measurement and control*. Cambridge university press, 2009.

[17] N. Yamamoto. Coherent versus measurement feedback: Linear systems theory for quantum information. *Physical Review X*, 4(4):041029, 2014.

[18] G. Zhang and M. R. James. Direct and indirect couplings in coherent feedback control of linear quantum systems. *IEEE Transactions on Automatic Control*, 56(7):1535–1550, 2011.